Specification (Test Condition, 25℃)

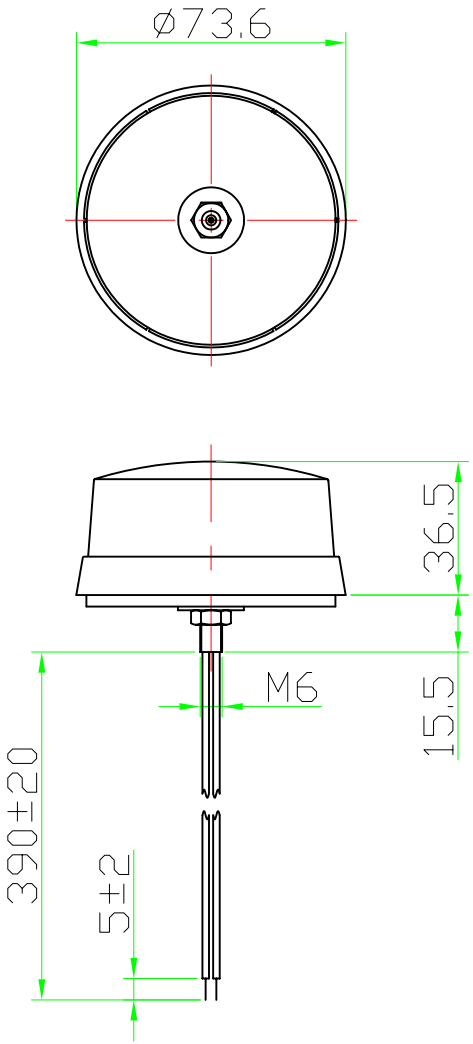

1.Materials/Color ..... Base：ABS/Black
..... Lens：Acrylic/Amber、Blue、Clear、Red
2.Rated Voltage..... 12VDC
3.Operating Voltage..... 8-15VDC
4.Max.Rated Current..... 150mA/12VDC
5.Flash Rate..... 115%p15 Per Minute
6.Operating Life ..... 200 Hours Continuous Duty At 12VDC
7. Operating Temperature Range ..... -20 ~ +60℃
8. Wires Connection ..... Red +12VDC
..... Black GND
9. Weight ..... 90±5 g

No.	DESCRIPTION	APPROVED	DATE

TOLERANCES UNLESS NOTED OTHERWISE
.X ±
.XX ±
.XXX ±
90° FORMED ANGLES +2° -1°

FIRST ANGLE PROJECTION

APPROVALS	DATE
DRAWN	
CHECKED	
APPROVED	04.01.07

DSW NINGBO DSW AUDIO & SECURITY EQUIPMENT
http://www.eastacoustic.com

Electronic Strobe Light
ESB-74

UNIT mm | DWG NO. E2.840.002
SCALE NOT TO SCALE | SHEET | VER 1.0